Dorlen Products Inc.

Mfgr. of: WATER *ALERT*® / SENSOR CABLE / CEILING GUARD®

6615 W. Layton Ave. Milwaukee, WI 53220
Phone: (414) 282-4840 FAX: (414) 282-9670
E-Mail: Dorlen@Execpc.com Web Site:www.waterallert.com

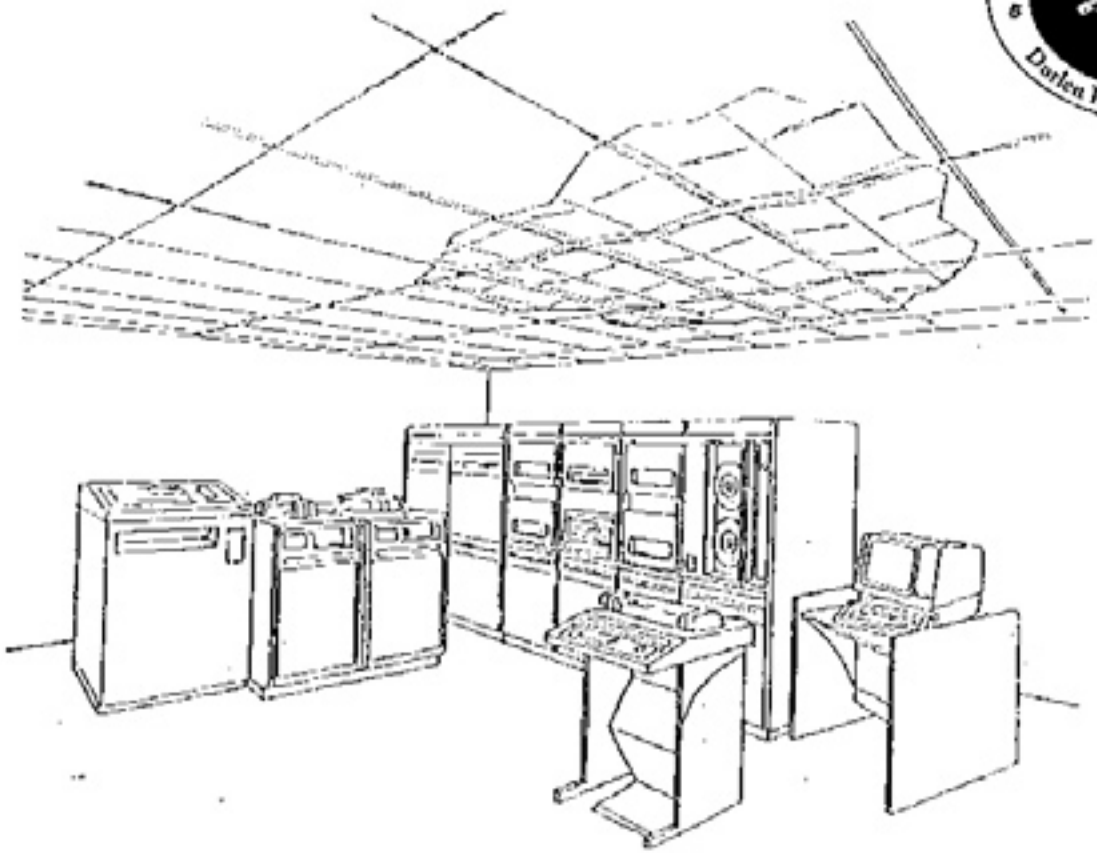

INSTALLATION AND OPERATION INSTRUCTIONS

SERIES 2000 WATER DETECTION SYSTEM

TABLE OF CONTENTS

LIST OF FIGURES

INSTALLATION INSTRUCTIONS - SERIES 2000

INTRODUCTION SERIES 2000

The SERIES 2000 line of water detection systems are the ultimate in protection against water leakage. This line of equipment provides early warning against water leakage above suspended ceilings through the use of supervised Ceiling Guard panels. The SERIES 2000 line also can monitor the subfloor using Water Alert surface water detectors.

The purpose of Ceiling Guard is to protect susceptible areas of high value, such as locations containing computing equipment, magnetic tape, electronic instrumentation and other equipment or material of high value. The Ceiling Guard System is used to sense small amounts of water/liquid leakage above 2'x4' or 2'x2' suspended acoustical ceiling panels. The system is made up of low profile sensing trays which contain small sensing contacts. These trays are fastened to the top side of conventional drop-in ceiling panels. The panels are interconnected for form zones of protection. The zones, in turn, are terminated in a Dorlen Products CSS-2000 detector. The detectors connect to a CGM Ceiling Guard Monitor. The system is designed to detect and provide indication of small amounts of leakage before the leakage accumulates to the point of leaking through to the area below. The SERIES 2000 system, once installed, will also provide indication by means of electronic supervision if the zone wiring is disrupted.

CEILING GUARD IS EASY TO INSTALL AND TEST. However, if you are not familiar with Ceiling Guard, please refer to the Ceiling Guard catalog excerpts attached (pages 28 - 30) which describe the SERIES 2000. After you have gained familiarization with the product line, these instructions should be reviewed and understood before proceeding. Because each installation site is somewhat different, it is impossible to give step-by-step detailed mechanical installation instructions for all situations. Thus, to some degree, these instructions may be considered to be guidelines and the installer may have to improvise in some instances (relative to trimming panels, etc.). The zone wiring instructions, however, must be followed explicitly.

Your order will be shipped in two or more containers. Unpack and handle all equipment carefully.

This installation instruction describes a CG24 system (2'x4' Ceiling Panels) which, for the most part, applies to the CG22 system as well. Page 12 describes the slight differences that the installer should follow when installing a CG22.

EQUIPMENT TERMINOLOGY

To clarify terminology used in these instructions, the following terms apply:

"sensing tray" - The troughed/styrene plastic tray containing three prewired sensing contacts (under dust covers) and two panel-to-panel connectors...not yet fastened to the ceiling panel.

"ceiling panel" - The 2'x4' or 2'x2' (or trimmed down) acoustical ceiling panel without the sensing tray attached.

"sensing panel" - The combination of sensing tray fastened to the ceiling panel.

"Tray Pack" - Carton of 8 - 2' x 4' sensing trays or 16 - 2' x 2' sensing trays (either covers 64 sq. ft. of ceiling).

"zone" - An array of interconnected sensing panels (up to 3 tray packs) that are terminated in a detector.

Installing Ceiling Guard involves four basic steps:

SECTION 1

Zone planning, monitor location selection and monitor mounting.

SECTION 2

Stringing low voltage "home-run" cables (Dorlen Type E) from each zone detector (Dorlen Model CSS-2000 or SS-2000) to the Monitor panel (Dorlen CGM line).

SECTION 3

Fastening Dorlen "sensing trays" to customer "ceiling panels" to create "sensing panels." Installing the sensing panels into the suspended "Tee" grid. Trimming panels as required for border and special size situations. Interconnecting installed panels and "test as you go." Terminating home-run cables to zone detectors and monitor panel.

SECTION 4

System test verification and operations familiarization.

See Figure A: Installation Components on the next page for pictorials.

FIGURE A: INSTALLATION COMPONENTS

Before starting the tray installation, Figure A below shows the various components involved with tray installation.

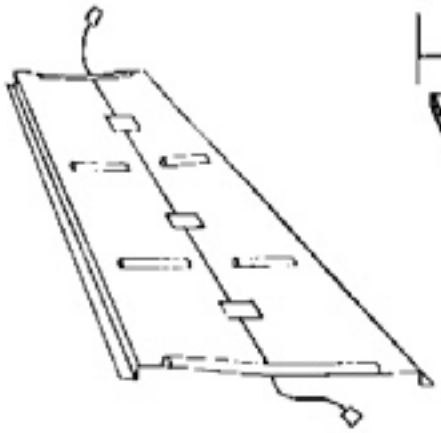

SENSING TRAY
(PROVIDED BY DORLEN PRODUCTS IN TRAY PACKS)

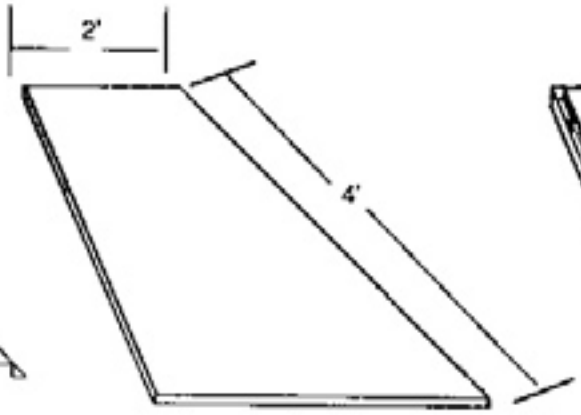

CEILING PANEL, 2X4
(CUSTOMER ACOUSTICAL PANEL)

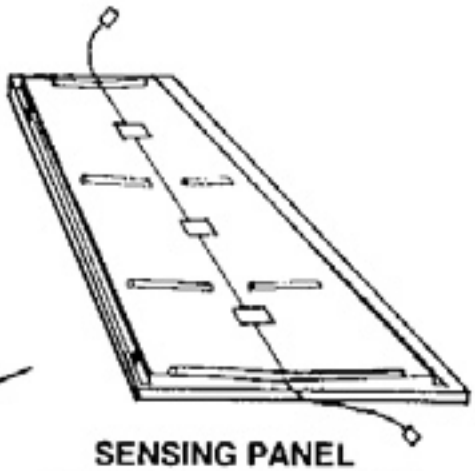

SENSING PANEL
(THE COMBINATION OF THE TWO ITEMS AT LEFT)

NOTE: 2' X 4' COMPONENTS SHOWN ABOVE...MAY ALSO BE 2' X 2'

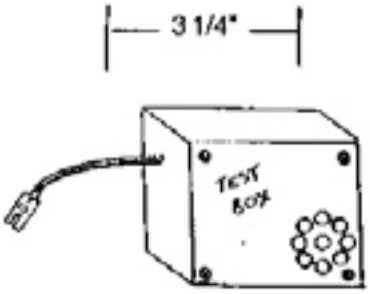

TEST BOX
(USED DURING TRAY INSTALLATION/INTERCONNECT)

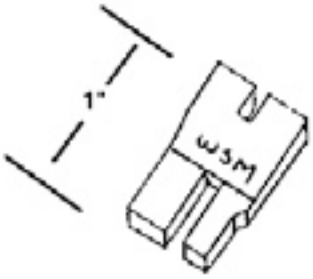

WATER SENSING MODULE
(USED DURING TRAY INSTALLATION/INTERCONNECT

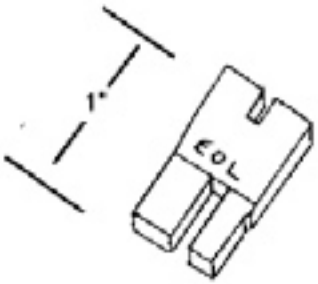

END OF LINE RESISTOR MODULE
(INSTALLED IN LAST CONNECTOR OF ZONE)

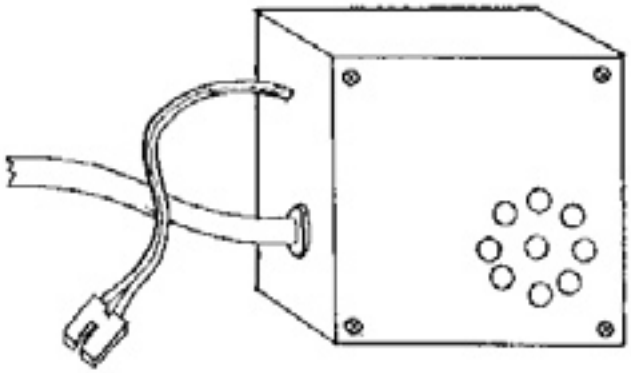

CEILING DETECTOR
CSS-2000

SUBFLOOR DETECTOR
SS-2000

SECTION 1: ZONE PLANNING AND MONITOR SETUP

ZONE SIZING

The zone size (the area covered by an array of sensing panels that terminate in a single detector) will vary from one installation to the next. The zone sizes of a given installation may also vary due to room sizes, equipment location, etc. In smaller installations, one detector for each CG Tray Pack (64 sq. ft.) is reasonable. In larger installations (greater than 500/1,000 sq. ft. coverage), one detector for every two or three CG Tray Packs (or fraction thereof) is reasonable and acceptable. **NOTE: Do not exceed** five **Tray Packs per detector (**320 **sq. ft. zone).**

CHOOSING A LOCATION FOR THE MONITOR

The SERIES 2000 Monitors consist of shelf mount units [CGM-6(T) and CGM-12(T)] and wall-mount units [CGM-20(T), CGM-40(T) and CGM-60(T)]. The location of the Monitor depends on many factors such as physical space, electrical requirements and whether or not the Monitor needs to be in a 24 hour manned environment. Wherever the Monitor is to be located, all models need 120VAC power. The CGM-6(T) and CGM-12(T) have power adapters which plug into a standard wall outlet. The CGM-20(T), CGM-40(T) and CGM-60(T) need to be hardwired into 120VAC power. NOTE: ALL CGM MONITORS DRAW A MAXIMUM OF 0.1 AMPS.

PRE-TESTING

Before mounting the CGM Monitor panel, it is advisable that the system be powered and tested. This is to insure that all electronics are working properly and that the installer is completely familiar with how the system operates before proceeding. Unpack the Monitor and detectors; all detectors have sample cables for the pre-test (Wall mount units also have a AC line cord for the pre-test). See page 19 for information on connecting the detectors and section 4 for guidelines on testing the system. When the test is complete, disconnect the detectors and put them aside - for now, leave the sample cable/detector combination in the state it was in when shipped.

MOUNTING THE MONITOR

If a shelf mount CGM-6(T) or CGM-12(T) has been purchased for the installation, mounting the Monitor consists only of locating a suitable location. Make sure that there is a wall outlet to plug the system into.

If a wall mount CGM-20(T), CGM-40(T) or CGM-60(T) has been purchased, the following instructions describe the mounting procedure:

1. Using the supplied masonry and/or plaster/wood hardware, mount the enclosure in the designated location. The cabinet itself can be measured to mark mounting holes.

2. Install the metal surface wire duct between the opening on the top of the CGM, up the wall and through a ceiling opening. Use the supplied flanges, grommet material and hardware for a neat installation.

3. Run 3 conductor armored (BX) cable for 120VAC power (provided) through the newly installed surface duct and into the CGM enclosure. Follow the wiring instructions in Figure B on the next page. **Note that the metal shielding ground wire of the 120VAC cable is tied to a grounding point located near the duct opening on the inside top surface of the CGM Monitor enclosure.**

4. If surface detectors (SS-2000) were purchased with the wall mount system, plastic surface wire ducts were included in your order. Normally, subfloor detector wiring would be run under the floor to one point, fed up through a wire drop, into the ceiling and down through the metal surface wire duct into the CGM Monitor enclosure. If the installation location does not have wire drops or other means of running wires from subfloor to ceiling, the plastic surface wire ducts can be used for wire runs. See pictorial (Figure B) on the next page.

FIGURE B: WALL MOUNT MONITOR INSTALLATION AND WIRING

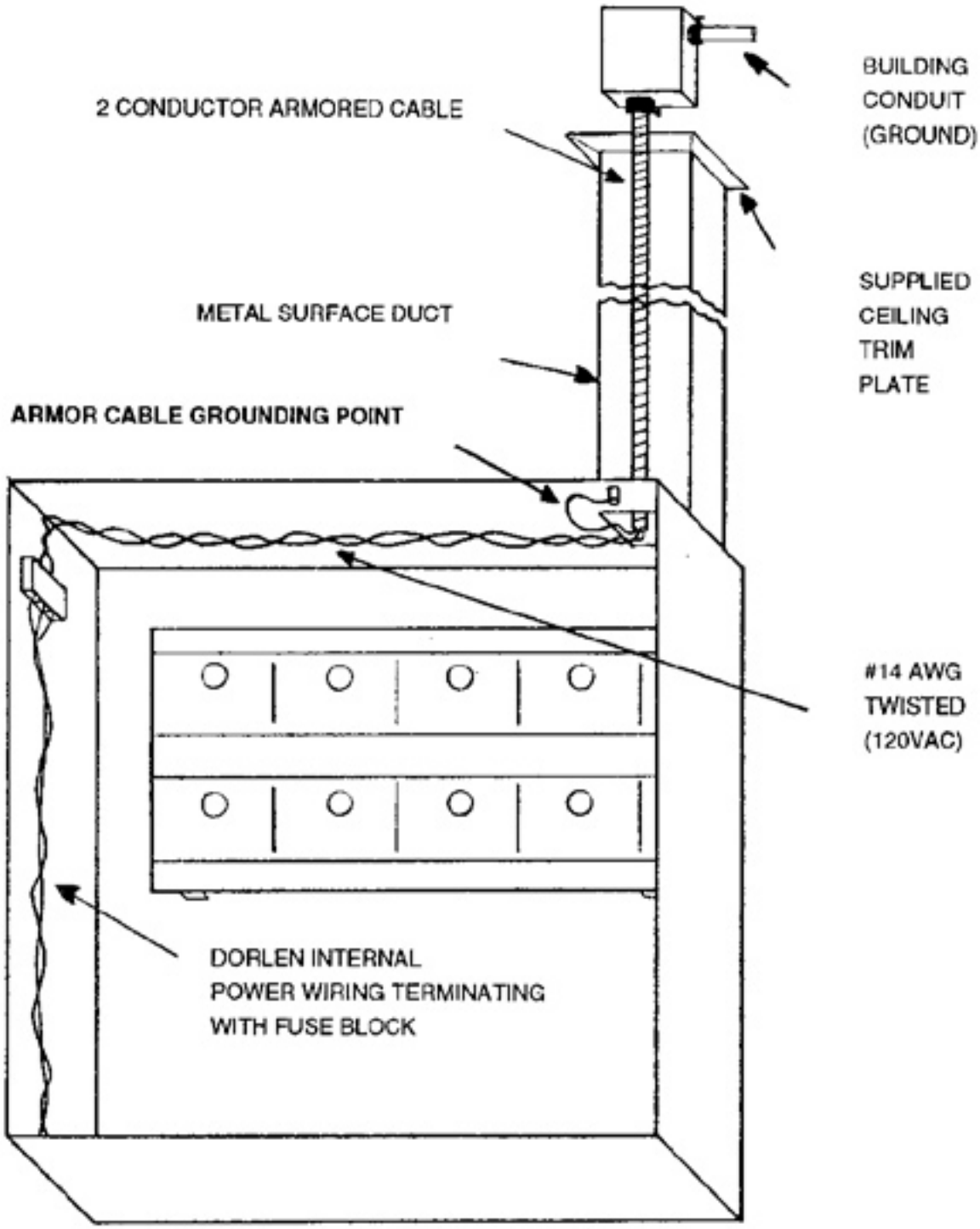

SECTION 2: DETECTOR TO MONITOR WIRING (HOME-RUN CABLE)

CSS-2000 CEILING DETECTOR CABLE RUNS

Each ceiling zone of interconnected sensing panels terminates in a CSS-2000 detector. Each detector, in turn, is connected to a CGM Monitor panel by means of a single, low voltage cable (Dorlen Type E). The detector "home-run" cable starts at a CSS-2000 detector and terminates at the CGM monitor panel - see Figure C.

In new installations, the ceiling home-run cables are installed when there is full access to the upper ceiling. The cables are suspended above the suspended ceiling Tee grid by means of hangers or tied to structure girder work. The detector end of the cable should drop in the approximate detector location and run to the monitor location. Provide adequate excess length on both ends and label both ends with the zone number.

In existing installations, where the Tee grid and ceiling panels are in place, the home-run cables are run before any sensing tray work is done. If it is not practical to hang the cables above the Tee grid, the Tee grid itself can be used to support the home run cables by means of the bridle rings provided. All the acoustical ceiling panels should be removed along the path of the home run cables. The cables should be run and held in place by means of hangers or the Tee grid mounted bridle rings (included). Label both cable ends with the zone number.

SS-2000 SUBFLOOR DETECTOR RUNS

Each subfloor SS-2000 detector is connected to a CGM Monitor panel be means of a single, low voltage cable (Dorlen Type E). The detector "home-run" cable starts at a SS-2000 detector and terminates at the CGM monitor panel - see Figure C.

There are several different ways to run the subfloor wires to the location of the CGM Monitor. Wire drops, conduit, surface duct material (provided) and other methods are all feasible. See the previous section for more information on installing the plastic surface wire ducts.

FIGURE C: DETECTOR TO MONITOR WIRING (10 ZONE SAMPLE INSTALLATION)

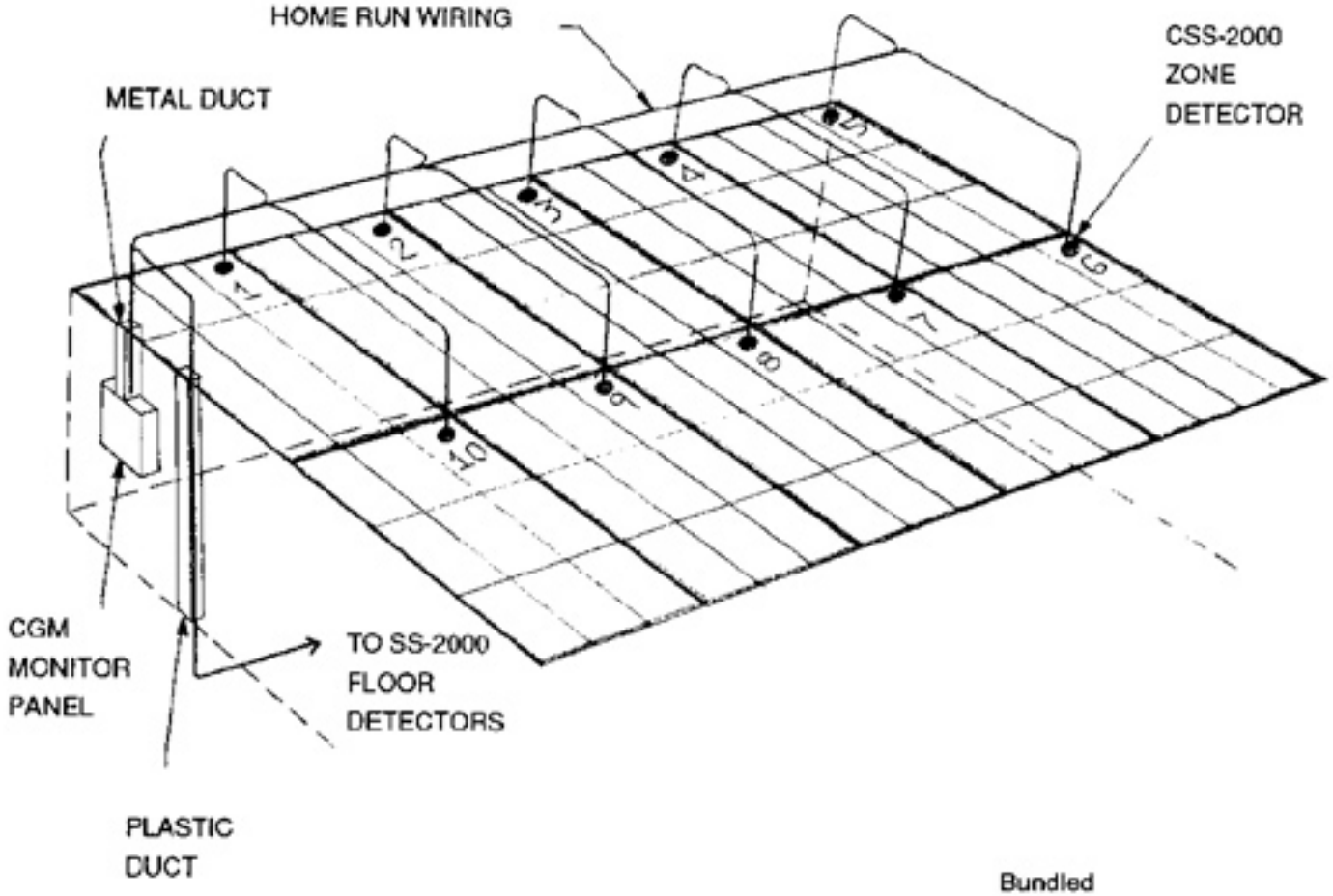

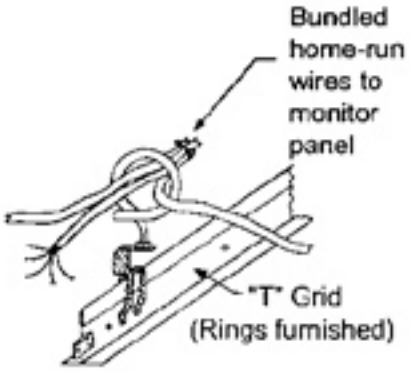

BRIDAL RING WIRING

SECTION 3: INSTALLING CEILING GUARD SENSING PANELS

Unpack the Test Box (TB) shipped with the system (in accessory kit). This Test Box will be used as a tester as the Ceiling Guard panels are installed. All Sensing Trays, Detectors and Test Box are carefully tested during and after manufacture and again before shipping.

The 9V Alkaline battery required to power the Test Box is already installed. The purpose of the TB is to insure proper connection and operation of each "sensing panel" as they are sequentially installed in the suspended grid. **When a zone is complete, the TB is replaced by the CSS-2000 detector for that zone**. Use of the TB provides assurance of proper zone wiring thereby avoiding any need to re-lift panels from the grid after the CSS-2000 is connected.

Take one of the styrene sensing trays and connect either of the tray connectors to the Test Box. Note that the tray end connectors are non-gender; i.e., any connector engages with any other connector. Also note how the latch and latch release works. Lift the dust cover (marked "DO NOT REMOVE") carefully above any of the three sensing contacts and touch the gold probes of any sensing contact with wet fingers. The Test Box will buzz.

Rather than having to continually touch wet fingers to the sensing contacts, a small Water Simulator Module (WSM) is provided for testing the sensing tray and wiring. Plug the WSM into the loose end connector of the above sensing tray. When the WSM is engaged, the TB connected at the other end of the sensing tray will buzz. **The WSM will be used to test each sensing panel in the suspended ceiling grid as they are installed**. This "Test-as-you-go" procedure is to avoid a situation wherein a complete zone of panels is installed and then discovering that the system is inoperative. By testing each sensing panel as it is installed, one is assured that after the last of the panels is installed and tested, a properly connected zone exists. See Figure D below.

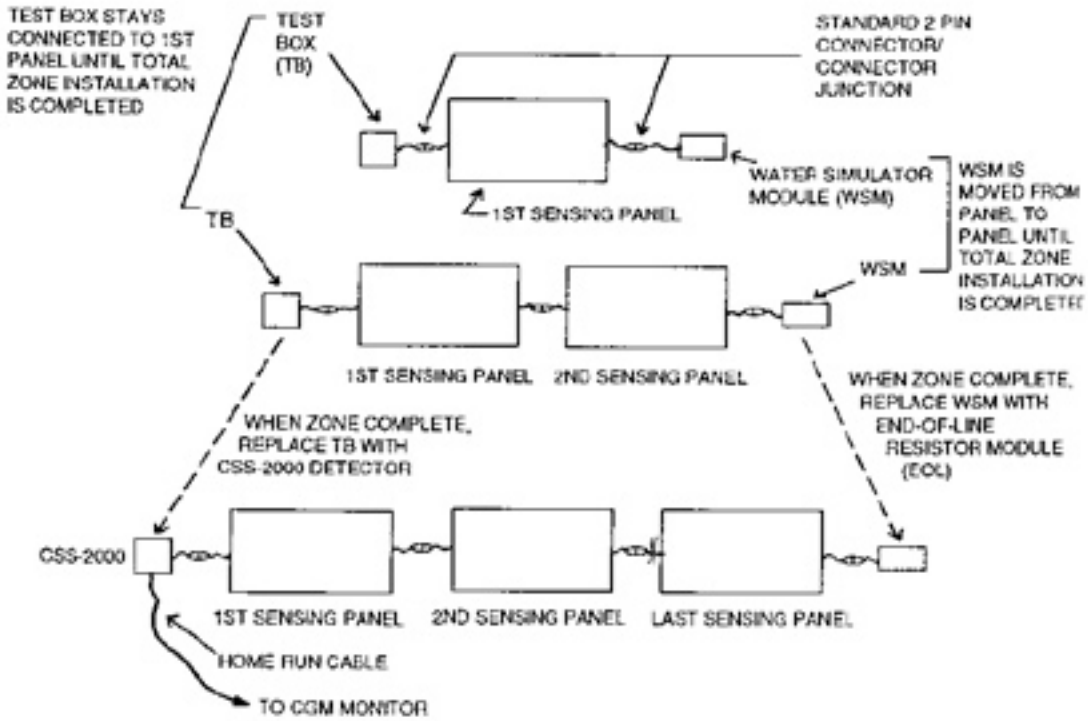

FIGURE D: "TEST-AS-YOU-GO" PROCEDURE

EXISTING CEILING INSTALLATION - CG24

This section assumes that a suspended ceiling already exists and that the installer will be removing the ceiling panels from the suspended ceiling grid array, fastening the sensing trays and returning the assembled sensing panels to their original location.

Each Ceiling Guard CG24 Tray Pack covers an area of 64 square feet. **A zone may contain up to 5 Tray Packs. Every zone terminates in a Dorlen CSS-2000 detector.** It is best to install a single zone at a time. Refer to a ceiling plan that shows which panels are to be removed and converted to water-sensing panels. If a plan does not exist, one can make up a plan, by using grid paper, looking from the top view and determining which combination of panels would be the best to protect the equipment below.

In many situations the total ceiling is covered. In either case, the ceiling to be covered should be divided into zones such that each zone covers a reasonably equal area. It is good practice to indicate on the plan the panel-to-panel interconnect wiring path. Save the ceiling zoning plan and post a copy at the monitor location after the installation is complete. Also, keep a copy of the zoning plan in with these instructions.

For the moment, it will be assumed that the zone to be covered contains no lamp fixtures, sprinkler heads, smoke detectors, heating/cooling diffusers, or other fixtures or devices. Figure F is an example of such a plan.

> CAUTION: Be sure the ladder used in removing/replacing ceiling panels is suitable for the purpose. Engaging connectors and doing other work may involve some leaning. Thus, use a second person to assist as necessary.

From your ceiling plan, remove all panels making up the first zone. Remove the panels carefully by lifting out of the grid system and turning slightly and dropping through the opening. Be careful that small chips from the ceiling panel or any other debris does not fall into the equipment below. Ideally, it is preferable that the equipment below be de-energized for the short period that it takes to install Ceiling Guard. Being de-energized, plastic sheeting may be used to cover the equipment. Having removed the panels, use a flat working surface, such as a desk or a bench and proceed as described below.

Lay the first ceiling panel face down on the working surface, such that the top side of the panel is available to fasten the sensing tray. See Figure E.

FASTENING THE SENSING TRAY TO THE CEILING TILE

Using the staple gun provided, staple the Sensing Tray at all 4 corners to the top side of the Ceiling Tile. This stapler uses an "Outward Clinch" staple (provided). If more staples are required call Dorlen, and they will be provided for free. A return shipping box has been provided to ship the stapler and extra staples back to Dorlen Products when the install is complete.

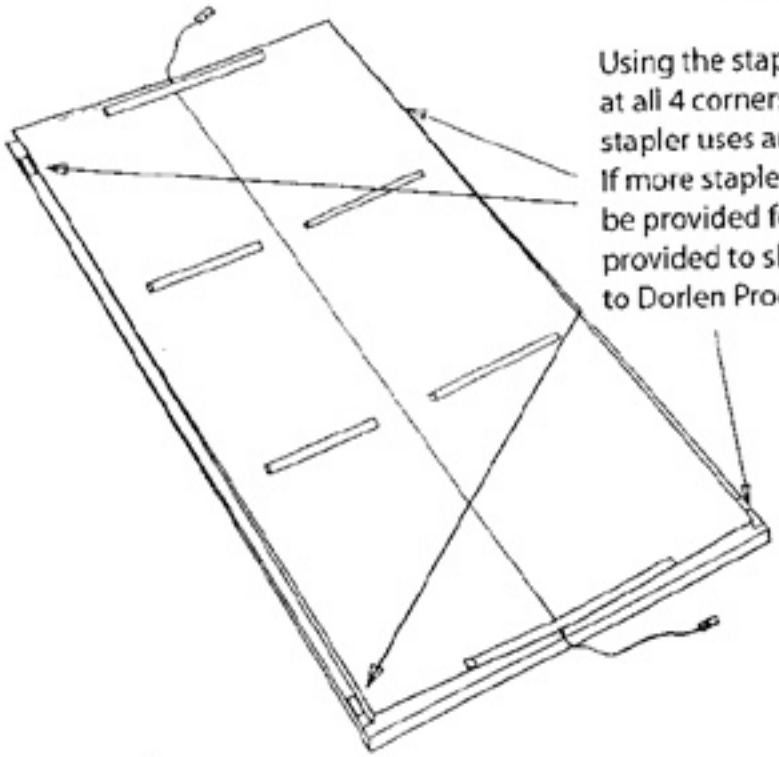

FIGURE E: FASTENING SENSING TRAY TO CEILING PANEL

Take the first sensing tray and center it on the top side of the ceiling tile. Using the stapler provided, fasten the sensing tray to the ceiling tile. Connect the Test Box, and by means of the WSM, verify that the #1 panel is opertating properly.

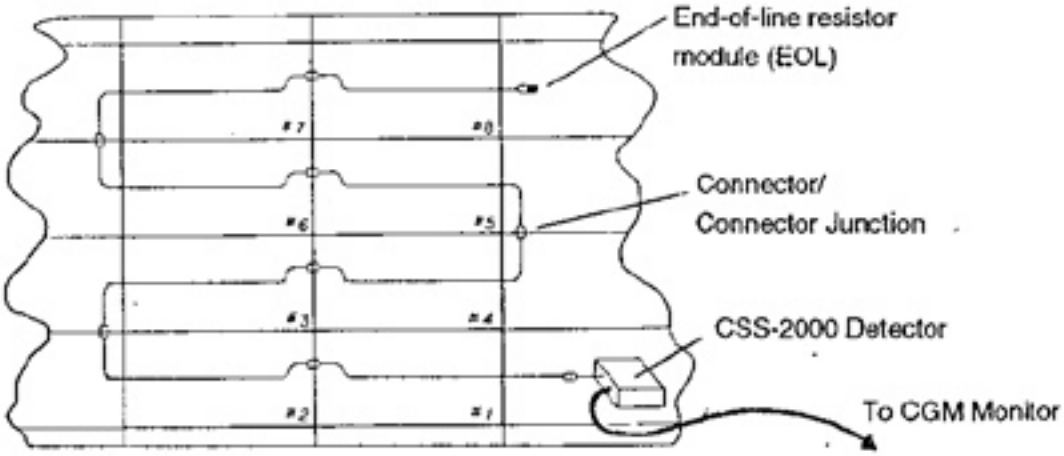

FIGURE F: SERIES 2000 - SIMPLIFIED ZONE INTERCONNECT

Relocate the #1 Sensing Panel in the ceiling grid system and leave the TB connected to same connector of panel #1 as above.

Fasten another sensing tray to ceiling panel #2. Install in the grid and plug panel #2 connector into the loose connector of panel #1. Test both panels by momentarily plugging in WSM in the loose connector of panel #2. Continue this procedure through the final panel in the zone being tested. When the last panel of the zone has been tested, go to page 19 and follow the instructions on terminating the home-run cable.

NOTE: There is adequate wire in all tray end connector wires to allow future access above the suspended ceiling without disengaging the latched connectors. To gain access, the sensing panel is lifted slightly and shifted over to rest on the adjacent panel. To discourage disconnection of the panels, the "DO NOT DISCONNECT" labels (furnished) may be used to wrap each latched connection pair as they are engaged.

Shown below is a ceiling plan that includes a light, sprinkler head and a support column, all of which may be encountered in more typical installations. Notice where extender cables (included in the installation kit) are used to enable panels to connect together in a continuous string. Use of deflectors and fitting panels around sprinkler heads will be covered in the following pages. Do not allow extender cables to rest on the top of light fixtures which become hot....run extender around fixture.

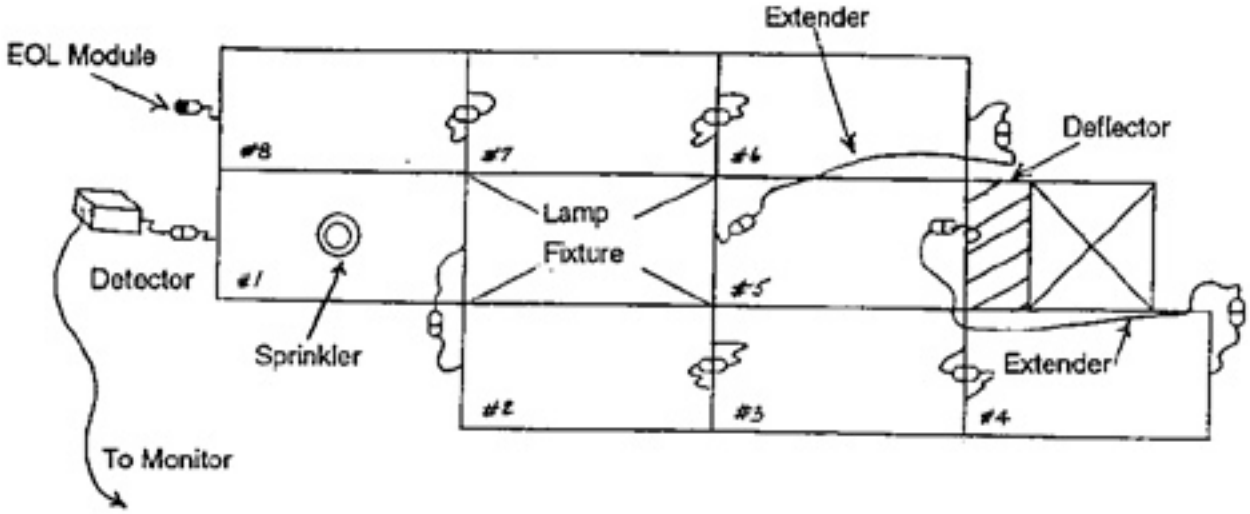

FIGURE G: A TYPICAL ZONE INTERCONNECT

LAMP FIXTURES

If there is a lamp fixture in the zone, take the styrene sheet provided and cut a 6" wide strip. With the ceiling panel (which is going to be converted to a sensing panel) removed adjacent to the lamp fixture, fasten the six inch sheet along the sloping edge of the lamp fixture with duct tape as shown in Figure H. The sensing panel next to the lamp fixture is moved into position such that the deflector sheet overlaps into the sensing tray.

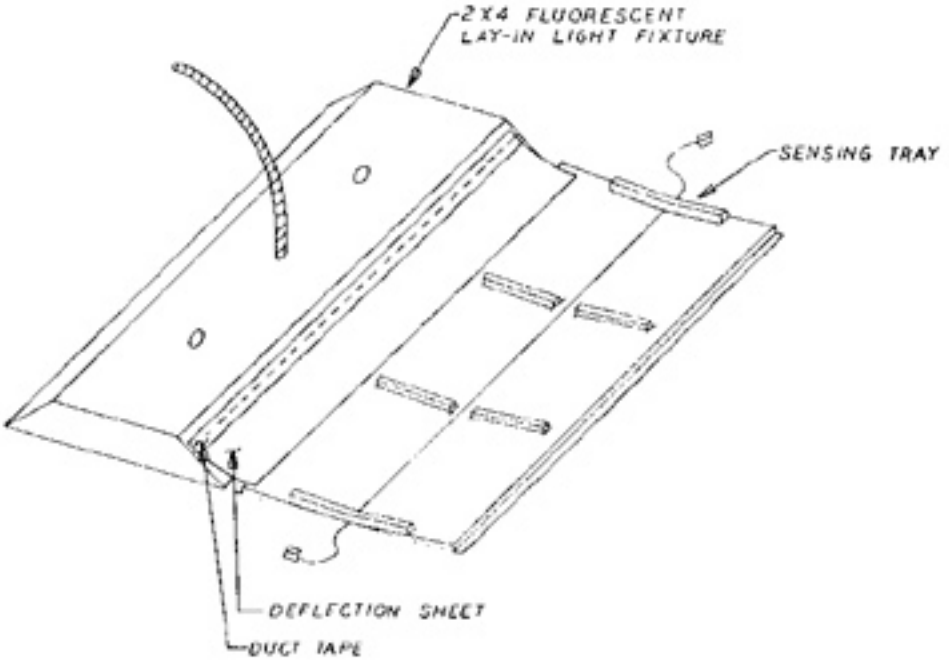

FIGURE H: LAMP FIXTURE DEFLECTOR

Always keep wires from laying atop lamp fixtures to avoid excessive heat exposure. Openings on the top of the lamp fixture should not be sealed off, as these openings allow heat generated by the fixture to escape. As shown in Figure H, you are forming a deflector from the lamp fixture which will divert water into the adjacent sensing panel. The same technique that is shown for lamp fixtures can also be used for heating/air conditioning diffusers and small trimmed down border panels. See Figure I below.

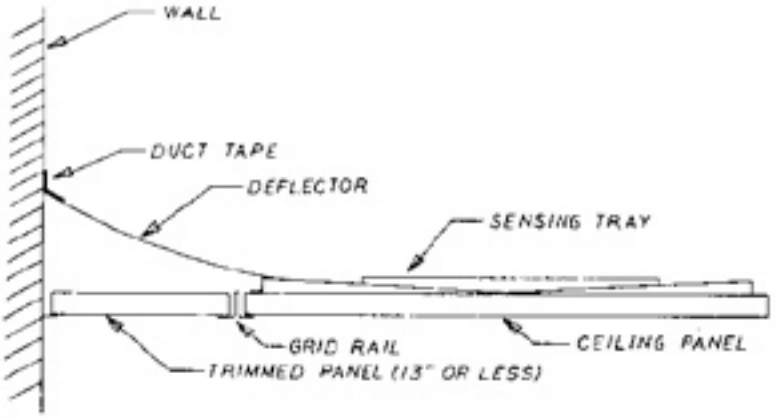

FIGURE I: TYPICAL DEFLECTOR USE

CAUTION: Proceed carefully when working around sprinkler heads. If the system is a "wet system" shut off the water pressure to the system during installation. Be sure the system is reactivated after Ceiling Guard is installed. If you are unfamiliar with your sprinkler system, contact your sprinkler contractor for assistance.

SPRINKLER HEADS

A ceiling panel containing a sprinkler head need not be removed from the support grid to install a sensing tray.

Proceed first by removing a ceiling panel adjacent to the panel with the sprinkler head. Carefully measure the location of the sprinkler head opening in the panel. Transfer this location to the sensing tray keeping it on the side opposite the wiring. Cut an opening for the sprinkler and then make an access cut to the nearest edge and away from the wiring.

Now install the cut tray around the sprinkler and use fasteners to anchor it to the ceiling panel. Apply duct tape to seal the access cut and use the putty tape provided in your installation kit to seal around the sprinkler pipe and tray. See Figure J.

If a sprinkler head is located in direct line with the middle electronic sensor, proceed as follows: Note where the two white wires to the center sensor exit the splice connection to the grey wire. Carefully cut each white wire close to the splice, leaving one wire about 1/2" longer than the other to prevent shorting. The center sensor may now be removed when the cut out is made. See Figure J.

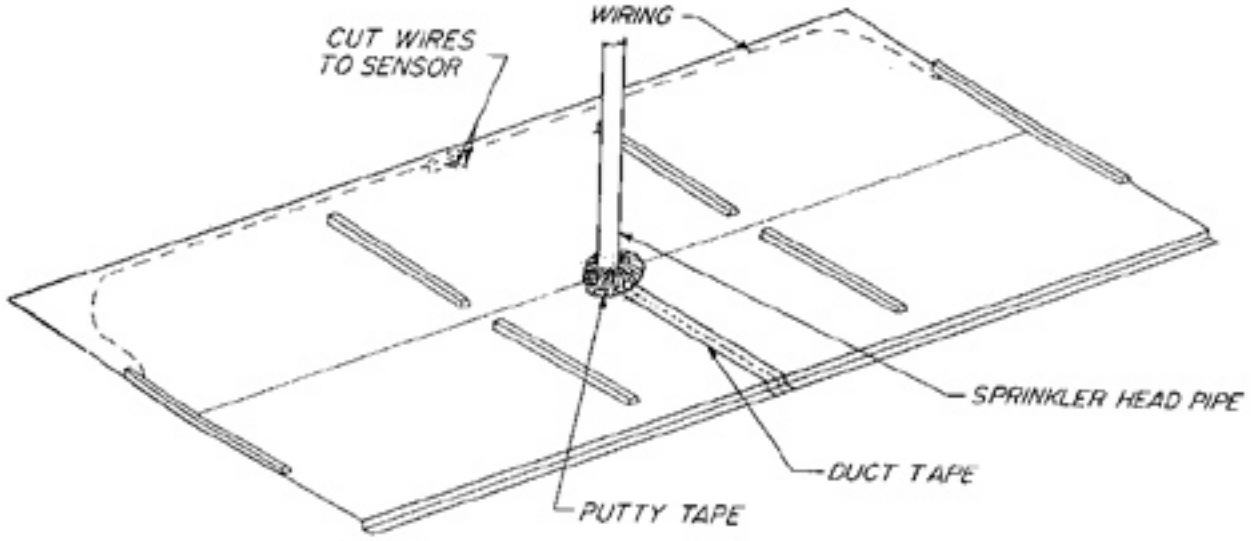

FIGURE J: CENTER LOCATED SPRINKLER HEAD

Note: Cut through panel to center hole is made on OPPOSITE side of panel wiring.

BORDER PANELS

Regarding ceiling panels along the border of the room that are trimmed down, these can be converted to sensing panels in the following manner; drop the narrow border panels from the ceiling grid system and measure the outline dimensions.

Trimmed down border panels fall into one of the following four cases:

CASE 1 - Border panels trimmed along the long dimension only with the remaining panel width 13" or greater.

CASE 2 - Border panels trimmed along the short dimension only.

CASE 3 - Border panels with both length and width trimmed (normally corner panels).

CASE 4 - Very small panels.

CASE 1

1. Measure the width of the ceiling panel (13" or greater).
2. Using a scissors or sheet metal shears, cut tray to desired width along side opposite wires.
3. Attach tray to ceiling panel using barbed fasteners only on the untrimmed flat edge.
4. Replace and test the trimmed sensing panel as described above.

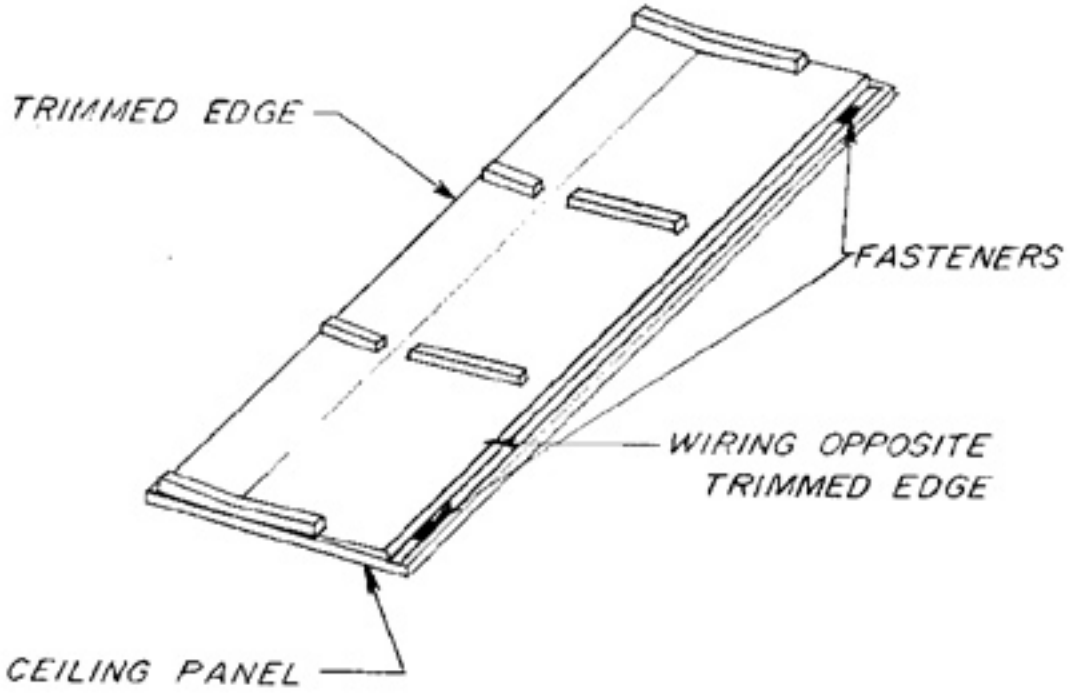

FIGURE K: TRAY CUT, WIDTH-WISE

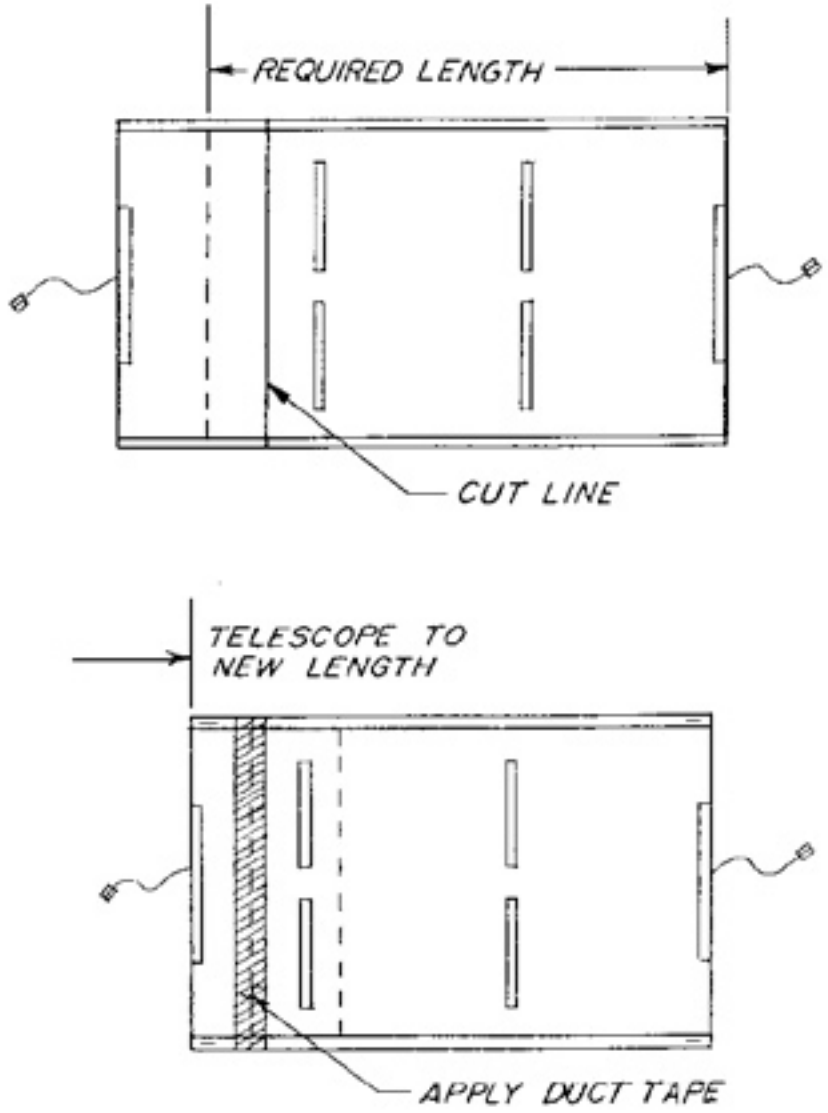

FIGURE L: TRAY SHORTENING TECHNIQUE

CASE 2

1. For any change in length, the tray is cut and "telescoped" down to the desired size. See Figure L.
   CAUTION: DO NOT CUT WIRES ON THE UNDERSIDE OF PANEL!

2. For minor changes in length, only one end of the tray need be cut. For major length reductions, you will need to cut and telescope both ends.

3. Align and adjust the cut tray sections to desired length and apply duct tape over seams on both sides of tray. Tape excess wire on underside of sensing tray so as not to interfere with tray mounting.

4. Center the shortened tray on trimmed ceiling panel and attach with fasteners on both flat edges. Refer to Figure E.

5. Replace and test the trimmed sensing panel as described above.

CASE 3

1. For changing both the length and width of a tray, follow the first 2 steps of Case 1 above. This will give the property tray width.

2. Next, follow the 5 steps of case 2 above.

CASE 4

It is up to the installer to judge whether or not a tray should be cut severely or a deflector should be used. For very small panels, we suggest the use of deflector panels. These deflectors will channel water towards the sensors of another panel that is adjacent to the small panel. See Figure I.

NEW CEILING INSTALLATIONS

The procedure for new installations is the same as existing ceilings except the sensing panels are assembled prior to the initial installation of ceiling panels. Because equipment is probably not physically located within the room at the time of the new ceiling installation, it is necessary to have the planned equipment location diagram. From this, the Ceiling Guard layout plan can be made to provide maximum equipment protection.

CG22 INSTALLATION

The general procedure for installing a CG22 system (2' x 2' panels) is the same as the CG24. There is a total of 16 trays for 2' x 2' panels with the CG22 Tray Pack as opposed to 8 trays for 2' x 4' panels. Layout regarding equipment protection, and adaptations for special devices are the same. Because there are twice as many interconnects for the CG22 as compared to the CG24, it is especially necessary to test panel-by-panel as they are put in place.

TERMINATING THE HOME RUN CABLE - CSS-2000

When the first zone is completely interconnected and panels are in place, the home run cable is terminated and the 1st zone tested for proper operation before proceeding with the remaining zones.

STEP 1 - With the Test Box still connected at the 1st panel, insert an end-of-line resistor module (EOL) into the last connector of the last panel...the Test Box should not buzz (the EOL's are shipped already connected to the CSS-2000 detector - for a pictorial of an EOL, see page 5).

STEP 2 - Return to the 1st panel of the zone, remove the Test Box and in its place connect the CSS-2000 detector to the 1st panel by means of the standard 2 pin connector.

STEP 3 - Remove the detector from the sample cable (for wall mount units, also remove the orange terminal strip plug). Remove the detector cover and install the home run cable (with strain relief) as shown in B-7282 (next page) into the 1/2" opening in the detector. Use the small yellow wire nuts furnished to make sound wire nut connections between detector pigtail leads and cable (B-7282)...Figure M, page 20. Replace the detector cover and leave detector above ceiling...leave the zone marker tag on wire.

STEP 4 - Make sure the CGM Monitor is unpowered. For the [CGM-6(T) and CGM-12(T)], flip the rear panel BATTERY switch to the "OFF" position. For the [CGM-20(T), CGM-40(T) and CGM-60(T)], make sure the AC and BATT switches are in the "OFF" position. Connect the Monitor end of the home-run cable to the 1st zone terminal strip following the color coding indicated on the panel. If you have a wall mount box, insert the orange terminal plug into the zone in question and then wire up the plug using the color codes on the red plastic overlay by tightening the plug's cage clamps. **Be sure to connect the bare shield wire to the black wire connection point as shown on B-7282.**

The individual wires should be stripped 3/8", strands twisted, and connected under the screw heads or under the cage clamps. Be sure there are no loose wire strands which could cause a short between terminals and that the screws are adequately tightened. Leave the zone marker tag in place.

STEP 5 - Refer to Section 4, Test Verification - and verify proper operation of the zone. If any problems are encountered, please call Dorlen Products 1-800-533-6392. After proper test verification, power down the Monitor as in step 4 and continue installing the remaining zones.

TERMINATING THE HOME RUN CABLE - SS-2000

SS-2000 subfloor detectors are wired the same as the CSS-2000 Ceiling Guard detector except that the SS-2000 only has three wire outputs: black, red and white. These colors correspond to the colors on the CGM Monitor panel. Follow steps 4 and 5 above to connect the SS-2000's.

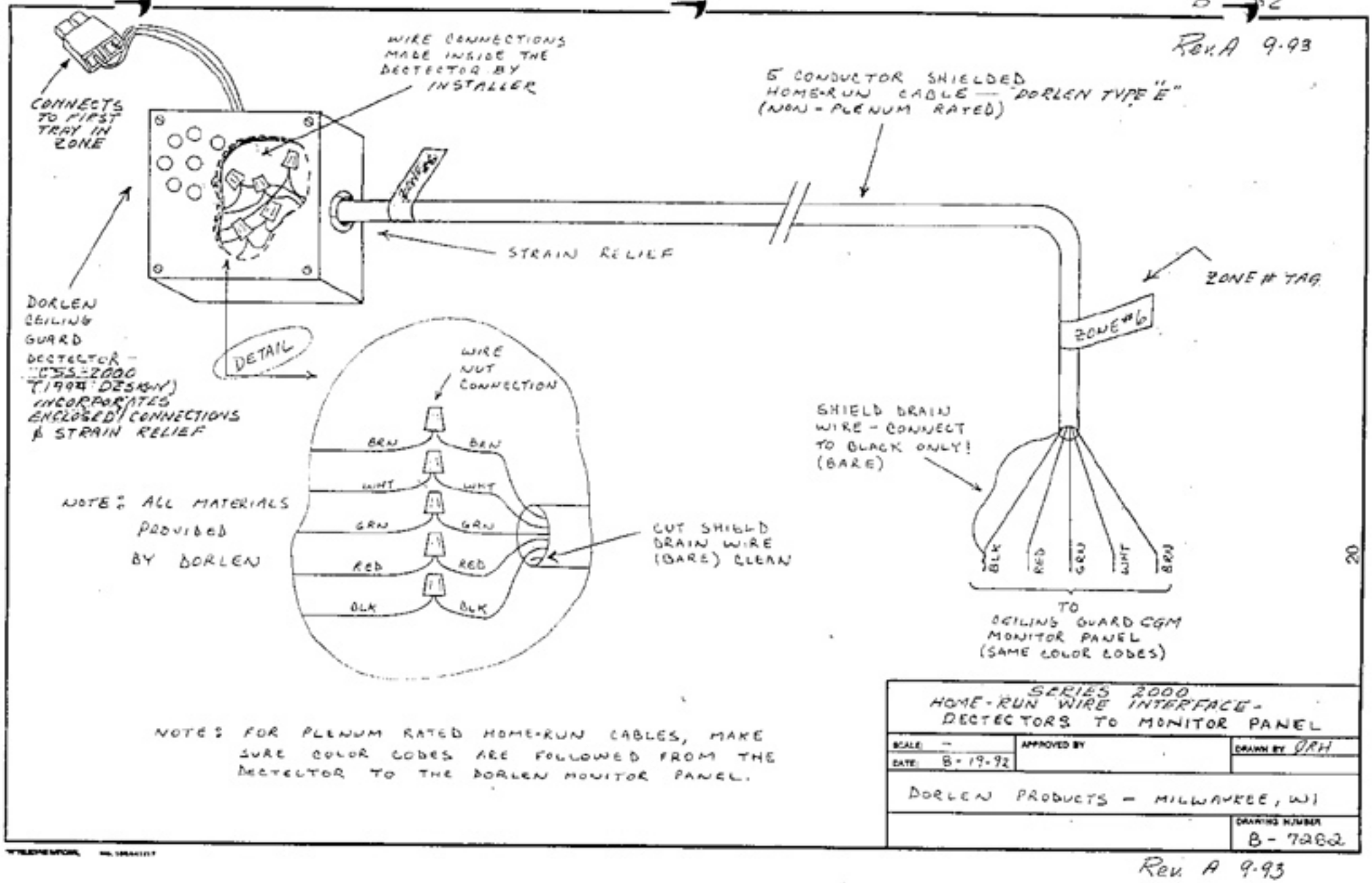

FIGURE M: CSS-2000 HOME-RUN WIRE INTERFACE

SECTION 4: SYSTEM TEST VERIFICATION

This System Test Verification section assumes that the ceiling tray installation, detector hook-up, home-run wiring and connections to the CGM Ceiling Guard Monitor has been completed.

The Series 2000 Ceiling Guard system is the latest Dorlen design consisting of CSS-2000 and SS-2000 detectors and one of the following monitor panels: CGM-6(T), CGM-12(T), CGM-20(T), CGM-40(T) or CGM-60(T) Monitor Panel.

DESCRIPTION OF CGM MONITORS

1. Provides power to connected ceiling and subfloor detectors.
2. Individual LED indication by zone of water leakage [WATER SENSED] or ceiling zone wiring disconnect [ZONE OPEN].
3. Provides zone selectable test signal to detectors. Verifies functions of Water Leakage Sense and Zone Wiring.
4. Upon any leakage detect condition, box provides contact closure for connection to existing security panel.
5. Upon any ceiling zone wiring disconnect, box provides 2nd contact closure for connection to existing security panel.
6. Unit provides LED display (2 LED's per zone), audible alarm, SILENCE switch, ZONE test select switch (shelf-mount only), TEST push button(s), RESET switch and RELAY DEFEAT switch (wall-mount only).
7. System has rechargeable battery back-up...Provides 2 days of monitoring in the event of AC line failure...Battery recharges upon AC line return.

DESCRIPTION OF CSS-2000 DETECTOR

1. Continually monitors zone panels for water leakage. Internal buzzer sounds upon leakage detection and signal provided to connected CGM Monitor Panel.
2. Continually supervises the monitored CGM zone...Internal buzzer sounds if zone wiring is disconnected and signal provided to connected CGM Monitor Panel.
3. Detector is testable from Dorlen CGM Monitor Panel.
4. CSS-2000 features:
   a. Powered from Dorlen Monitor Panel
   b. Housed in compact molded housing
   c. Solid State Piezo-Electric buzzer
   d. Encapsulated circuitry, unaffected by moisture, dirt, humidity, long term operation, etc.
   e. Wire Nut connections to Monitor Panel Cable. Strain relief cable entry.
   f. Connects to sensing panel array via "standard" CG 2-pin non-gender connector on 2 ft. flat cable. CSS-2000 stays above ceiling.

DESCRIPTION OF SS-2000 DETECTOR

1. Continually monitors floor/surface for water leakage. Internal buzzer sounds upon leakage detection and signal provided to connected CGM Monitor Panel.
2. Detector is testable from Dorlen CGM Monitor Panel.
3. SS-2000 features:
   a. Powered from Dorlen Monitor Panel
   b. Housed in compact molded housing
   c. Solid State Piezo-Electric buzzer
   d. Encapsulated circuitry, unaffected by moisture, dirt, humidity, long term operation, etc.
   e. Wire Nut connections to Monitor Panel Cable. Strain relief cable entry.

CGM SHELF MOUNT MONITOR OPERATION - CGM-6/12(T)

REAR PANEL - SHELF MOUNT

The rear panel has five-pin screw-type terminal strips for each channel input. These strips are marked with the Channel number (zone#) and color coding. Connection to the 2000 series detectors are made via these terminal strips.

The CGM is shipped with the rear panel back-up battery switch in the "OFF" position. Leave the Battery switch in the "OFF" position at this time.

There are two rear panel 3-pin screw-type terminal strips connected to the internal isolated contacts of the "Water Sense" relay and "Zone Open" relay. These SPDT contacts are rated 28V at 1 amp resistive (200V MAX).

> ***CAUTION:*** If voltage above 24V is applied to these terminal, a piece of insulating board should cover the terminal strip for personnel safety reasons.

FRONT PANEL - SHELF MOUNT

When the system is monitoring, the green **"System Monitoring" LED** will continually flash. Should AC power fail, the system will continue to monitor for a minimum of two days on the internal rechargeable battery. When AC line power returns, the batteries will automatically recharge (6 hours typical full recharge time).

Should any zone detect water: the **"Warning" lamp** will indicate, the zone **"Water Sensed" LED** will flash and the Water Sensed relay will activate. Should any ceiling zone wiring be opened (tray disconnection): the **"Warning" lamp** will indicate, the zone **"Zone Open" LED** will flash and the Zone Open relay will activate.

Either alarm condition will cause the audible buzzer on the front panel to activate (unless the adjacent switch is in the **"Silence"** position).

If, as a result of the push-button "test" (or an actual alarm condition) the system is activated, the **"Reset" switch** will reset the system. If the alarm condition still exists, the system will reactivate.

MANUAL TEST - SHELF MOUNT

Apply AC power to the system by plugging in the AC adaptor to 120VAC. The green front panel "System Monitoring" LED should indicate (flashing)...If any other front panel lights or LED's indicate, depress the **"Reset" switch**. Flip the rear panel battery switch to "ON" after AC power is applied. No change in any indication should occur.

Select zone #1 by means of the 6 or 12 position rotary switch. Push the red **"Test" push-button:**

If a CSS-2000 ceiling detector is connected to the zone, the Water Sense and Zone Open LED's should activate. If an SS-2000 subfloor detector is connected to the zone, only the Water Sense LED should light.

The momentary Test push button operation causes the zone alarms to latch. This is desirable because a momentary or intermittent water leak is then "latched" until manually reset. Since many small leaks occur at night when water pressure is high, the latch feature aids in early detection. Proceed with the manual testing thru all zones, 1 or 2 LED's should indicate for each zone - depending on the type of detector connected to the zone. The relays will also activate and latch during the test procedure until a reset occurs. After each zone test, the system may be reset by means of the momentary "Reset" toggle switch.

NOTE: Pushing the Test push-button sends a signal to the zone detectors located in the ceiling or under the floor. A properly working detector will send back signals to the monitor. The detector in the zone that is being tested will alarm while the Test push button is depressed.

Note that if NO detector is connected to a particular zone, NO LED's or buzzers should activate for that zone.

If any zone connected to a detector fails to respond properly to the manual test, check the wiring at the associated rear panel terminal strip and if necessary, the wire nut connections in the zone detector. (Figure M).

After all zones are tested and proper results obtained, the system is properly monitoring. If proper results are not achieved, call Dorlen Products, toll-free 1-800-533-6392 for technical assistance.

CGM WALL MOUNT MONITOR OPERATION - CGM-20/40/60(T)

FRONT PANEL - WALL MOUNT

When the system is monitoring, the green **"System Monitoring" LED** will continually flash. Should AC power fail, the system will continue to monitor for a minimum of two days on the internal rechargeable battery. When AC line power returns, the batteries will automatically recharge (6 hours typical full recharge time).

Should any zone detect water, the red **"Water Sensed" lamp** will flash. Should any ceiling zone wiring be opened (tray disconnection), the red **"Zone Open" lamp** will flash.

Either alarm condition will cause the audible buzzer on the front panel to activate (unless the adjacent switch is in the **"Silence"** position).

An optional Dorlen wall mount front panel lock kit can be purchased to allow entry to the inside of the CGM Monitor by authorized facility personnel only.

INTERNAL CONTROLS - WALL MOUNT

The red plastic overlays should have marker pen zone locations indicated. Associated with each zone are two red LED's (below the overlay) which indicate, by zone, **"Water Sense"** and **"Zone Open"**. There is also a red recessed **"Test"** push-button associated with adjacent groups of TWO zones.

At the bottom of the enclosure is the Master Control Box. From let to right, these items are:

Fuse #1, 1/2 amp	120 VAC side of line
Fuse #2, 2 amp	Low voltage side of circuit
"AC"	Supplies AC power to system (apply before "BATT")
"BATT"	Applies Battery back-up power to system
"RESET"	If, as a result of the push-button "TEST" or an actual alarm condition) the system is activated, the reset switch will reset the system. If the alarm condition still exists, the system will reactivate.
"RELAY DEFEAT"	When testing the system by means of the red push button, it may be desirable not to activate the relays. If this is the case, depress and hold the "RELAY DEFEAT" switch on the left side of the Master Control panel. As long as the switch is depressed, the relays will remain in their LAST state and they will transfer to the CGM's CURRENT state (activated or not) when the switch is let go.
"RELAYS"	There are two single-pole-double-throw isolated relays which indicate "WATER SENSE" or "ZONE OPEN" which are common to all channels. The LED's associated with each relay indicate when the relay is activated (i.e., alarm condition). These SPDT contacts are rated 28V at 1 amp resistive (200V MAX).

Before applying AC power, visually check the wiring connection at each orange connector against the color coding indicated on the red panel overlays. Correct any wring errors...be sure the uninsulated shield wire connects to the black connection only.

POWER ON - WALL MOUNT

Apply AC power to the system by switching the "AC" switch to on. The green front panel System Monitoring" LED should indicate (flashing)...If any other front panel lights or internal LED's indicate depress the **"Reset" switch.**

Connect the back-up battery after AC power is applied by means of the "BATT-ON" switch. No change in any indication should occur.

MANUAL TEST- WALL MOUNT

Push and hold the recessed red **"Test" push-button** for at least 1 second:

If a CSS-2000 ceiling detector is connected to the zone, the Water Sense and Zone Open LED's should activate. If an SS-2000 subfloor detector is connected to the zone, only the Water Sense LED should light.

The momentary Test push-button operation causes the zone alarms to latch. This is desirable because a momentary or intermittent water leak is then "latched" until manually reset. Since many small leaks occur at night when water pressure is high, the latch feature aids in early detection. Proceed with the manual testing across each row, 2 or 4 should indicate for each zone - depending on the type of detector connected to the zone. The relays will also activate and latch during the test procedure unless the "RELAY DEFEAT" is held depressed during the test procedure.

NOTE: Pushing the Test push-button sends a signal to the zone detectors located in the ceiling or under the floor. A properly working detector will send back signals to the monitor. The 2 detectors in the zone that is being tested will alarm while the Test push button is depressed.

Note that if NO detector is connected to a particular zone, NO LED's or buzzers should activate for that zone.

If any zone connected to a detector fails to respond properly to the manual test, check the wiring at the associated rear panel terminal strip and if necessary, the wire nut connections in the zone detector. (Figure M).

After all zones are tested and proper results obtained, the system is properly monitoring. If proper results are not achieved, call Dorlen Products, toll-free 1-800-533-6392 for technical assistance.

SECTION 5: MAINTENANCE AND TROUBLESHOOTING

Once Ceiling Guard is installed and tested per these instructions, the sensing panels should require no maintenance. Connectors used to interconnect panels are best quality industrial grade. The dust cover over each sensor will prevent dust and dirt accumulation at the sensing contacts.

One may want to retest the system after a few months or at some routine schedule to verify proper system operation. In the unlikely event that the system fails to perform properly, please refer to Trouble shooting below.

TROUBLE SHOOTING

If a particular channel fails to respond to the "Manual Test" or "System Monitoring" green LED fails to flash, proceed as follows:

1. Verify CGM Monitor is getting 120VAC power.
2. Verify that all wires connected to the terminal strips are tightly connected and no loose wire strands exist.
3. Remove AC power and switch the battery switch to "OFF". Check that the wire nut connections inside the CSS-2000 or SS-2000 detector of the defective channel are intact.
4. For shelf mount units, check the fuse located on the rear panel. For wall mount units, check the two fuses located on the Monitor Control Box.
5. If the above does not indicate cause of problem, call Dorlen Products at 1-800-533-6392 for assistance.

If a particular channel indicates "Zone Open", the zone panel-to-panel wiring has been disconnected. Visually inspect the zone panel-to-panel interconnect wiring and reconnect as required. The ceiling plan showing the panel-to-panel interconnect wiring path will be helpful in locating the open connection. Reset the system by means of the "Reset" switch.

If a visual inspection of the zone wiring does not indicate cause of the problem, call Dorlen Products for assistance.